Coordinated Control Strategy between Large-scale Photovoltaic Power Stations and VSC-HVDC without Communication

Yan Wang, Tianqu Hao, Feng Gao
School of Electrical Engineering
Shandong University
Jinan, China

***Abstract*—This paper proposes a novel coordinated control strategy between PV stations and VSC-HVDC without communication to well respond the frequency variation and fault ride-through of AC main grid, where the VSC-HVDC is assumed to deliver the PV power to the loads in the field without the large synchronous generators. In specific, the receiving end converter (REC) of VSC-HVDC will switch its control mode accordingly upon detecting the frequency and voltage variations, then the sending end converter (SEC) of VSC-HVDC will regulate its output voltage along with the DC voltage variation. And consequently, PV stations will adjust their output power reference in response to the AC voltage variation of VSC-HVDC SEC. Doing so, the active power balance between the PV stations and HVDC is achieved and the DC transmission voltage can be restored to the steady state value. As a result, the proposed method can save the communication investment and reduce the dc capacitance of VSC-HVDC. The theoretical findings were verified through both Matlab simulation and an experimental prototype.**

Keywords—Grid integration, coordinated control strategy, Fault ride-through, frequency response, VSC-HVDC, PV station

I. Introduction

Compared with the traditional AC transmission technologies, voltage source converter HVDC (VSC-HVDC) transmission technology can prevent cascading outages, increase system reliability and connect to weak even passive networks. VSC-HVDC adopts the high-voltage fully controlled semiconductor technology and the pulse width modulation (PWM) technology to independently control the active and reactive power and not increase the short circuit capacity of the system, which is the shortcoming of the traditional HVDC transmission system [1]. Hence, VSC-HVDC is suitable for integrating multiple large-scale PV stations at a weak grid.

Vector current control(VCC) is most used for VSC-HVDC link in practice because of the efficient decoupling and current-limiting capability [2]. Nevertheless, with the VCC method, the transmitted power of VSC-HVDC is controlled as the scheduled value [2]. Thus, VSC-HVDC cannot provide any frequency and voltage support to the receiving end AC grid when a disturbance occurs. Even when a large proportion power of receiving end grid is supplied by the VSC-HVDC system, the receiving end grid inertia becomes small, and the AC power disturbance would threaten the grid stability [3]. So, it is better for the receiving-end converter (REC) of VSC-HVDC to take part in the power regulation of the receiving end grid, by emulating the synchronous generator or providing the necessary reactive power support. Based on this idea, several control strategies are presented for VSC-HVDC to realize the droop mechanism and inertia response or fault ride-through capability, such as virtual synchronous generator(VSG) [4], power-synchronization control [5]-[6] and Enhanced Voltage Drop Control [7]. But a drawback of these control strategies is that they cannot work well when the sending power of VSC-HVDC is not from a large-scale AC grid, while (e.g.) just from PV stations, because the VSC-HVDC cannot properly control its dc voltage within the allowed range upon the active power imbalance occurs between sending end converter (SEC) and receiving end converter of VSC-HVDC.As a possible solution, the communication system can be used to obtain the information of receiving end grid, which can be transmitted to sending end converter and power stations of sending-end grid to achieve the active power balance of VSC-HVDC, but communication systems will definitely reduce the reliability of whole VSC-HVDC system [8]. In some communication-free schemes, the SEC imposes controlled AC voltage dips in proportion with the DC over-voltage to curtail the active power generated by the wind turbines during the receiving end grid faults [7]-[9], which however cannot restore the DC voltage during fault operation period and consequently need large DC capacitance to limit the variation range of DC transmission voltage.

This paper proposes a novel coordinated control strategy without communications between PV stations and

VSC-HVDC in order to achieve both frequency response and fault ride-through capabilities. The REC adopts VSG control to provide frequency support to the AC grid, which would be switched to VCC control when receiving end AC grid faults occur, so that the REC could provide reactive power support to the AC grid. In addition, the criteria for switching between VSG and VCC control is presented. In order to efficiently adjust the active power input of VSC-HVDC, a new control method for changing the sending end AC voltage is presented in this paper, then the PV stations will change their output power reference in response to the AC voltage variation. Doing so, the DC voltage of VSC-HVDC link can be restored to the steady state value when disturbance occurs, which will improve the system stability and reduce the dc capacitance.

The rest of this paper is organized as follows. Section Ⅱ presents the study system and the basic control strategy of the whole system. Section Ⅲ describes the control mode switching method of REC. Then, the coordinated control strategy between PV stations and VSC-HVDC is proposed in Section Ⅳ. Finally, the theoretical findings are verified through both Matlab simulation and an experimental prototype in Section Ⅴ.

II. Study System and its Basic Control Strategy

As shown in Fig. 1,multiple large-scale PV stations are integrated by a VSC-HVDC transmission link. Each converter of the system is connected to the power grid at the point of common coupling (PCC) through an LCL filter and a transformer. A two-level topology is applied to the VSC-HVDC system in order to illustrate the proposed coordinated control strategy briefly and clearly. This control strategy can also be applied to other VSC topologies.

Under normal operating conditions, PV stations will output the maximum power from PV arrays, where the maximum power point tracking (MPPT) algorithm is needed [10]. Fig. 2 shows the control method of grid-tied PV inverter. The amplitude reference of its output current I_{Mref} can be derived from the MPPT algorithm. And then a Proportional Resonance (PR) controller is used for tracking the reference current. The expression of PR controller is expressed as

$$G_{PR}(s) = K_P + \frac{K_I s}{s^2 + w_0^2} \tag{1}$$

Where, $w_0$is the resonance frequency of the controller, K_P and $K_I$are the proportional and integral gain of the controller, respectively.

The SEC of VSC-HVDC is used for maintaining the AC voltage of the sending grid to transmit the active power of PV stations. So the control strategy of SEC adopts constant AC voltage control. The control method of SEC is shown in Fig. 3.

In order to provide frequency support to the receiving end power grid, the VSG control method should be applied to REC. While, it is necessary for REC to control DC voltage of VSC-HVDC constant in order to keep the balance of active power through the DC link [11]. To do this, a constant DC voltage control loop should be added on the VSG control. The control method of REC is shown in Fig. 4.

As seen in Fig. 4, the active power control loop simulates the inertia and primary frequency modulation characteristics of synchronous generator, the output of this loop is considered as the phase angle of the AC voltage reference. And the output of reactive control loop is considered as the magnitude of the AC voltage reference. Then the double closed-loop control

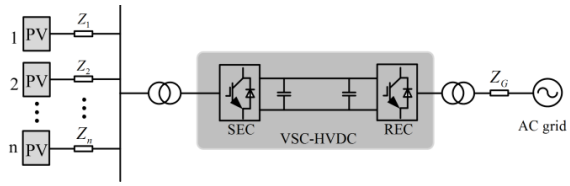

Fig. 1 System structure of large-scale photovoltaic power stations integrated with VSC-HVDC

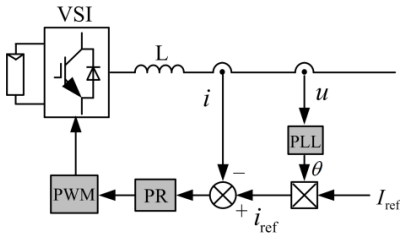

Fig. 2 Controller of grid-tied PV inverter

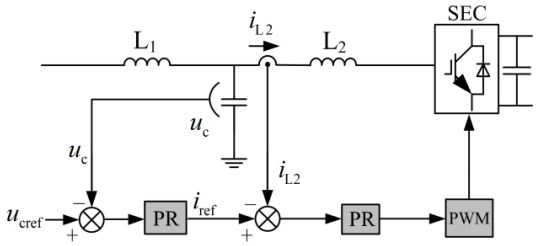

Fig. 3 Constant AC voltage controller of sending end converter

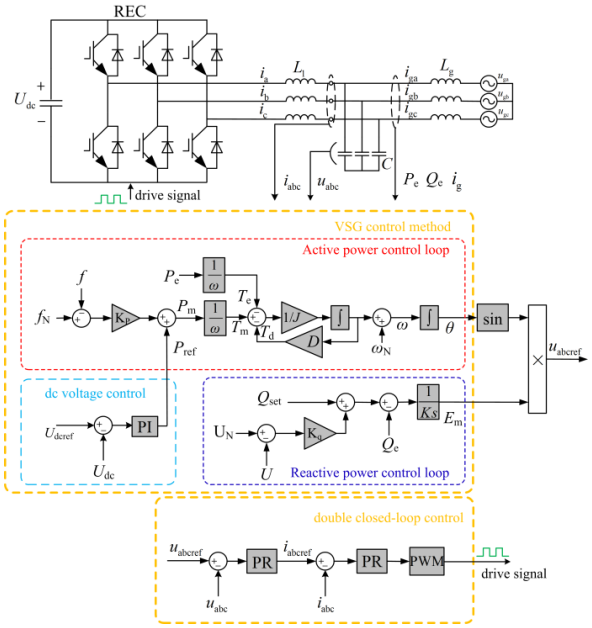

Fig. 4 Topology and control diagram of the VSG

will be introduced to track the synthesized voltage reference. As described in the instantaneous power theory [12], the output active and reactive powers of the REC can be calculated as

$$P_e = \frac{3}{2}(u_{cd} i_d + u_{cq} i_q) \tag{2}$$

$$Q_e = \frac{3}{2}(u_{cq} i_d - u_{cd} i_q) \tag{3}$$

where, u_{cd} and u_{cq} are the capacitor voltages in the dq frame, i_d and i_q are the injected grid currents in the dq frame. According to Fig. 4, we have

$$J\frac{d\triangle\omega}{dt} = T_{\mathrm{m}} - T_{\mathrm{e}} - T_{\mathrm{d}} = \frac{P_{\mathrm{m}}}{\omega} - \frac{P_{\mathrm{e}}}{\omega} - D(\omega - \omega_{\mathrm{N}}) \tag{4}$$

$$P_{\mathrm{m}} = P_{\mathrm{ref}} + K_{\mathrm{p}} \cdot (f_{\mathrm{N}} - f) \tag{5}$$

$$\omega = d\theta / dt \tag{6}$$

$$K\frac{dE_{\mathrm{m}}}{dt} = Q_{\mathrm{set}} - Q_{\mathrm{e}} \tag{7}$$

$$Q_{\mathrm{set}} = Q_{\mathrm{ref}} + K_{\mathrm{q}}(U_{\mathrm{N}} - U) \tag{8}$$

Formula (4) is the swing equation. P_m and is the input mechanical power, J and D are the inertia constant and the damping constant, respectively. ω_N is reference values of VSG angular frequency. P_{ref} is active power reference obtained by the DC voltage control method illustrated in Fig. 4. When DC voltage fluctuates, P_{ref} will be adjusted accordingly to keep the DC voltage stable.

III. Control Mode Switching Method of the Coordinated Control Strategy

Although VSG control is applied to the REC, the REC can't provide more frequency support due to constant DC voltage control. Besides, when a fault takes place in the receiving end grid, active power transmission capability of the REC is limited, but the SEC can't change the input power accordingly without communications.This will cause a fast increasing DC voltage and even equipment damage of VSC-HVDC link. Thus, it is necessary for the whole system to switch control mode to achieve frequency support and FRT capabilities. In this section, a control mode switching method without communications is proposed.

Firstly, the REC detect AC voltage at PCC. If the detected frequency excursion exceeds a defined threshold, the DC voltage control on REC is deactivated, then REC provides frequency support behave as a synchronous generator. The DC voltage fluctuates because of the changed output power of VSC-HVDC link, the control mode of SEC should be changed to maintain DC voltage stable when the DC voltage exceeds a defined limit. Meanwhile, the output voltage magnitude of SEC should be changed which will be detected by PV stations. Then output power of PV stations will be changed according to AC voltage variation. A new control method for SEC is proposed as shown in Fig. 7, by which the DC voltage can be restored to the steady state value during transient process. When the frequency of receiving end grid is restored, DC voltage reaches to another limit, then the control mode of SEC and REC switch back. If the voltage sags is detected by REC, a backup VCC control is activated and the VSG control is deactivated, so that REC can provide reactive power support to receiving end grid.

The implementation of trigger signal for control mode switching method is shown in Fig. 5. As shown in Fig. 5, the hysteresis loop based implementing method is adopted to avoid frequently switching of control mode.U_{up1},U_{up2},U_{down1} and U_{down2} are the critical value of control mode switching, and Ctrl is the trigger signal which is derived from Ctrl1 plus Ctrl2.

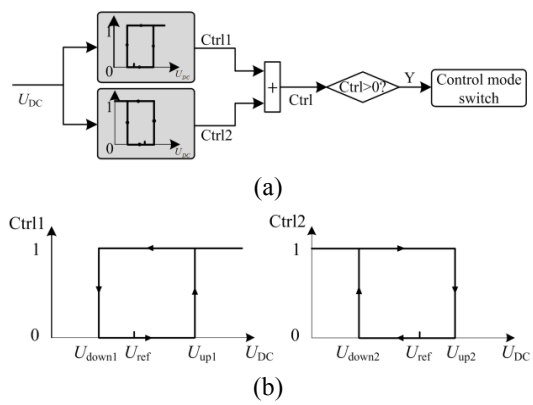

Fig. 5 (a) Implementation of trigger signal and (b) relationship of mode switching signals and DC voltage

If the AC voltage sag or the frequency increase, the output power of REC reduce which cause a increase of DC voltage. When the DC voltage is above U_{up1}, Ctrl1 is 1 and Ctrl2 is 0, then Ctrl is 1, so that the trigger signal is activated. The DC voltage decrease after AC voltage restore, and Ctrl become 0 when the DC voltage is below U_{down1}. Then, the trigger signal is deactivated. And vice versa.

In order to avoid the signal Ctrl1 and Ctrl2 switching at

the same time which will cause a wrong trigger signal, now set the DC voltage critical value to meet $U_{down2}<U_{down1}<U_{up2}<U_{up1}$.

IV. THE NOVEL COORDINATED CONTROL STRATEGY BETWEEN PV STATIONS AND VSC-HVDC

As mentioned earlier, both control mode of SEC and REC will change when REC provide frequency support or reactive support, and then the output power of PV stations change according to the magnitude of AC voltage at the PCC. The specific control strategy is as follows.

A. PV inverter controller

As shown in Fig. 6(a), the PV inverter change the output power according to the magnitude of AC voltage detected on PCC. With the MPPT capability, the PV inverter output maximum power so that the additional power by REC can't be achievable. A battery storage inverter is expected to operate along the droop characteristics which is shown in Fig. 6(b). In consideration of the voltage fluctuation caused by line impedance, the output power of PV and battery inverter won't change when the AC voltage located in 0.97p.u.~1.03p.u.

B. SEC controller

As shown in Fig.7, a DC voltage control loop is applied to maintain DC voltage stable meanwhile change the magnitude of the AC voltage. Assume that the inner double closed-loop is well controlled, the block diagram of DC voltage loop is shown in Fig.8.

The error transfer function of the system is obtained as

$$\Delta U_{dc}(s)=\frac{U_{dcref}(s)}{1-\frac{(K_P s+K_I)K_v K_i \alpha}{s}} \tag{9}$$

The steady state error of step response is obtained as

$$\Delta U_{dc}=\lim_{s\to 0} s\cdot \Delta U_{dc}(s)=\lim_{s\to 0} s\cdot \frac{U_{dcref}}{s}\cdot \frac{U_{dcref}(s)}{1-\frac{(K_P s+K_I)K_v K_i \alpha}{s}}=0 \tag{10}$$

So, the DC voltage can be restored to the steady state value when disturbance occurs.

C. REC controller

The VSG control of REC is shown in Fig.4. However, a backup VCC control shown in Fig. 9 should be activated when the voltage sag occurs in the receiving end power grid. Atypical low voltage ride-through (LVRT)criteria [13] of PV systems requires that the system remain connecting to the grid and supply the reactive power for the grid voltage recovery. The required reactive current can be expressed as follows

$$\begin{cases} I_{gqref} \ge 1.5\times(0.9-U_T)I_N & (0.2<U_T\le 0.9) \\ I_{gqref} \ge 1.05\times I_N & (U_T\le 0.2) \\ I_{gqref}=0 & (U_T>0.9) \end{cases} \tag{11}$$

Where, U_T represent the per-unit value of the voltage at the PCC, I_N represent the rated current of REC.

As shown in Fig. 4 and Fig. 9, input variables of the inner current loop of the VSG and VCC control are identical, so that it is achievable for the control of REC to switch between

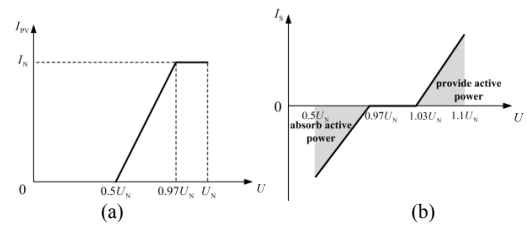

Fig. 6 (a) droop characteristics of PV and (b) droop characteristics of battery inverters

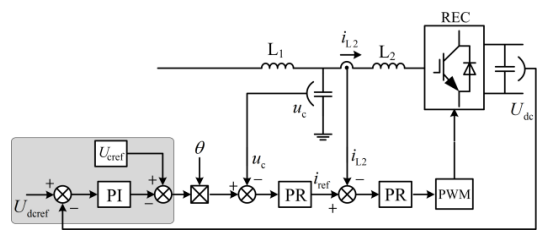

Fig. 7 Controller of SEC

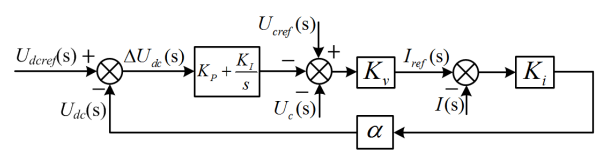

Fig. 8 Block diagram of DC voltage loop

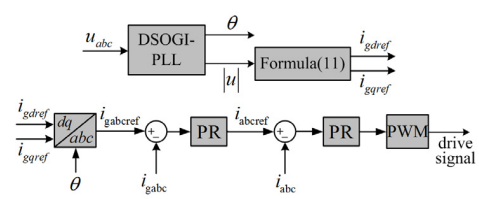

Fig. 9 Backup VCC control

TABLE I Simulation Parameters

Item	Values
Nominal DC voltage	+/-320 kV
AC voltage	500 kV
Inverter-side inductor $L1$	8 mH
Filter capacitor$C$	30 μF
Grid-side inductor Lg	5 mH
DC-link capacitor	10 mF

VSG and VCC control method.

V. Simulation and Experimental Verifications

Simulations are conducted by Matlab/Simulink to assess the frequency response capability and the FRT capability of PV stations integrated with VSC-HVDC adopting the proposed coordinated control strategy.

A. Frequency Response Capability

To examine the frequency response capability of the REC, the study-case system of Fig. 1 is used. Ten 100 MW PV stations are connected to the VSC-HVDC, and the receiving end grid is composed of an equivalent 1000-MVA synchronous generator and 2000 MW load. The simulated system parameters are listed in TABLE Ⅰ. A smaller load of 100 MW is connected to the receiving end grid and is disconnected after 0.5 s. Fig. 10shows the waveforms of the active power output from the REC, the receiving end grid frequency, the DC voltage, the ac voltage and current of the SEC, respectively. The DC voltage control of REC is deactivated after the frequency drop more than 0.07 HZ, then, the REC act as a synchronous generator to output more power according to the frequency drop which cause the DC voltage drop rapidly. After the DC voltage drop more than 2000V, the control mode of SEC is switched and the DC voltage is controlled to the rated value due to the response of the PV and storage inverter. After the load is disconnected, the output power of REC is decreased and DC voltage is increased. After the DC voltage increase up to 1000V, the control mode is switched back.

B. FRT Capability

To evaluate the FRT capability for balanced faults, the system of Fig. 1 is used. A three-phase voltage dip occurs at the receiving end grid, the duration of 400ms,resulting in a remaining voltage of 50% at the filter capacitor of REC. Fig. 11 shows the waveforms of the AC voltage and current of the REC, the reactive power output from the REC, the DC

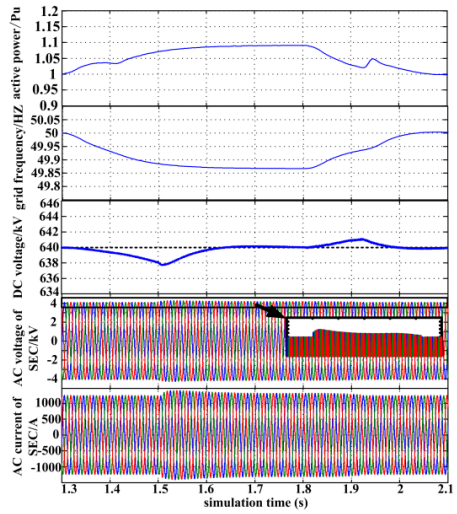

Fig. 10 Response of a 100 MW step increase of the load

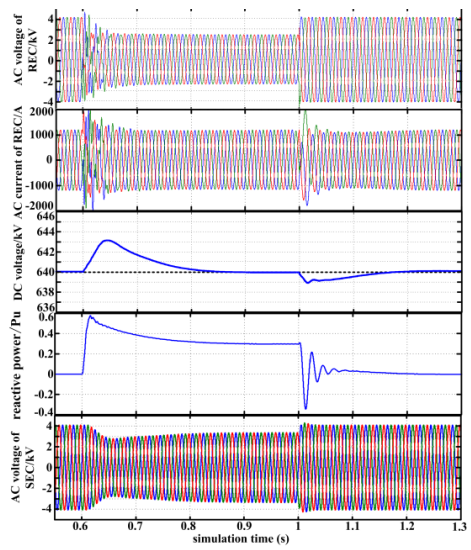

Fig. 11 The response curve after a balance fault

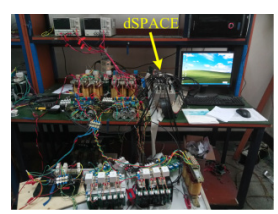

Fig. 12 Photograph of the prototype

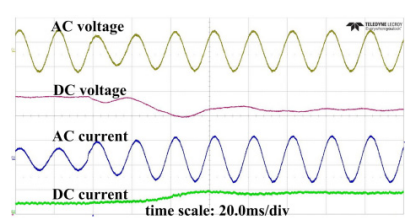

Fig. 13 Experimental waveforms

voltage, the AC voltage of the SEC, respectively. As shown in Fig. 11, after a dynamic process similarly to the frequency regulation, the REC can provide reactive power support to the receiving end grid, the PV stations can change the output power accordingly, and the DC voltage can restore to the normal value. What's more, the overcurrent can be limited at the moment of control mode switching.

Experiments were conducted to verify the performance of the proposed coordinated control strategy. Fig. 12 shows the photograph of the prototype. The developed control algorithm was executed on a dSPACE1103 real-time platform.

The experiment result of the phase voltage and current of the REC, the DC voltage and current are shown in Fig. 13.

VI. Conclusion

When multiple large-scale photovoltaic (PV) stations are integrated by VSC-HVDC transmission, frequency response and FRT capabilities of VSC-HVDC are beneficial to enhance the transient stability of receiving end power grid. This paper proposes a novel coordinated control strategy without communications between PV stations and VSC-HVDC. With the proposed control method, the REC can provide frequency support when disturbance occurs. With control mode switching, the import and export active power of the VSC-HVDC link can be balanced quickly. The control method proposed for SEC ensure that the DC voltage can be restored to the steady state value when disturbance occurs. What's more, with the control of REC switch between VSG and VCC control, the FRT capability can be obtained. The theoretical findings were verified through both Matlab simulation and an experimental prototype.

References

[1] N. Flourentzou, V. G. Agelidis, and G. D. Demetriades, “VSC-based HVDC power transmission systems: An overview,” *IEEE Trans. Power Electron.*, vol. 24, no. 3, pp. 592–602, Mar. 2009.

[2] C. Guo, W. Liu, C. Zhao and R. Iravani, “A Frequency-based Synchronization Approach for the VSC-HVDC Station Connected to a Weak AC Grid,” *IEEE Trans. Power Del.*, vol. 32, no. 3, pp. 1460–1470, Jun. 2017.

[3] S. I. Nanou and S. A. Papathanassiou, "Grid Code Compatibility of VSC-HVDC Connected Offshore Wind Turbines Employing Power Synchronization Control," *IEEE Trans. Power Syst.*, vol. 31, no. 6, pp. 5042-5050, Nov. 2016.

[4] Q. C. Zhong and G. Weiss. “Synchronverters: Inverters that mimic synchronous generators, ” *IEEE Trans. Ind. Electron.*, vol. 58, no. 4,pp. 1259–1267, Apr., 2011.

[5] L. Zhang, L. Harnefors, and H.-P. Nee, “Power-synchronization control of grid-connected voltage-source converters,” *IEEE Trans. Power Syst.*, vol. 25, no. 2, pp. 809–820, May. 2010.

[6] M. Guan, W. Pan, J. Zhang, Q. Hao, J. Cheng, and X. Zheng, “Synchronous generator emulation control strategy for voltage source converter (VSC) stations,” *IEEE Trans. Power Syst.*, vol. 30, no. 6, pp. 3093–3101, Nov. 2015.

[7] I. Erlich, Ch. Feltes and F. Shewarega, "Enhanced Voltage Drop Control by VSC–HVDC Systems for Improving Wind Farm Fault Ride through Capability," *IEEE Trans. Power Del.*, vol. 29, no. 1, pp. 378-385, Feb. 2014.

[8] C. Feltes, H. Wrede, F. W. Koch, and I. Erlich," Enhanced Fault Ride-Through Method for Wind Farms Connected to the Grid Through VSC-Based HVDC Transmission," *IEEE Trans. Power Syst.*, vol. 24, no. 3, pp. 1537-1546, Aug 2009.

[9] I. Erlich, Ch. Feltes, and F. Shewarega, " Enhanced Voltage Drop Control by VSC–HVDC Systems for Improving Wind Farm Fault Ride through Capability," *IEEE Trans. Power Del.*, vol. 29, no. 1, pp. 378-385, Feb. 2014.

[10] G. Ding, F. Gao, H. Tian, C. Ma, M. Chen, G. He, and Y. Liu., "Adaptive DC-Link Voltage Control of Two-Stage Photovoltaic Inverter During Low Voltage Ride-Through Operation," *IEEE Trans. Power Electron.*, vol. 31, no. 6, pp. 4182-4194, Jun. 2016.

[11] M. Guan, J. Cheng, C. Wang, Q. Hao, W. Pan, J. Zhang, and X. Zheng, “The Frequency Regulation Scheme of Interconnected Grids With VSC-HVDC Links,” *IEEE Trans. Power Syst.*, vol. 32, no. 2, pp. 864–872, Mar. 2017.

[12] H. Akagi, E. Watanabe, and M. Aredes. Instantaneous Power Theory and Applications to Power Conditioning. New Jersey: IEEE Press,2007.

[13] Technical Requirements for Connecting Photovoltaic Power Station to Power System, GB/T 19964-2012, China, Dec. 31, 2012.